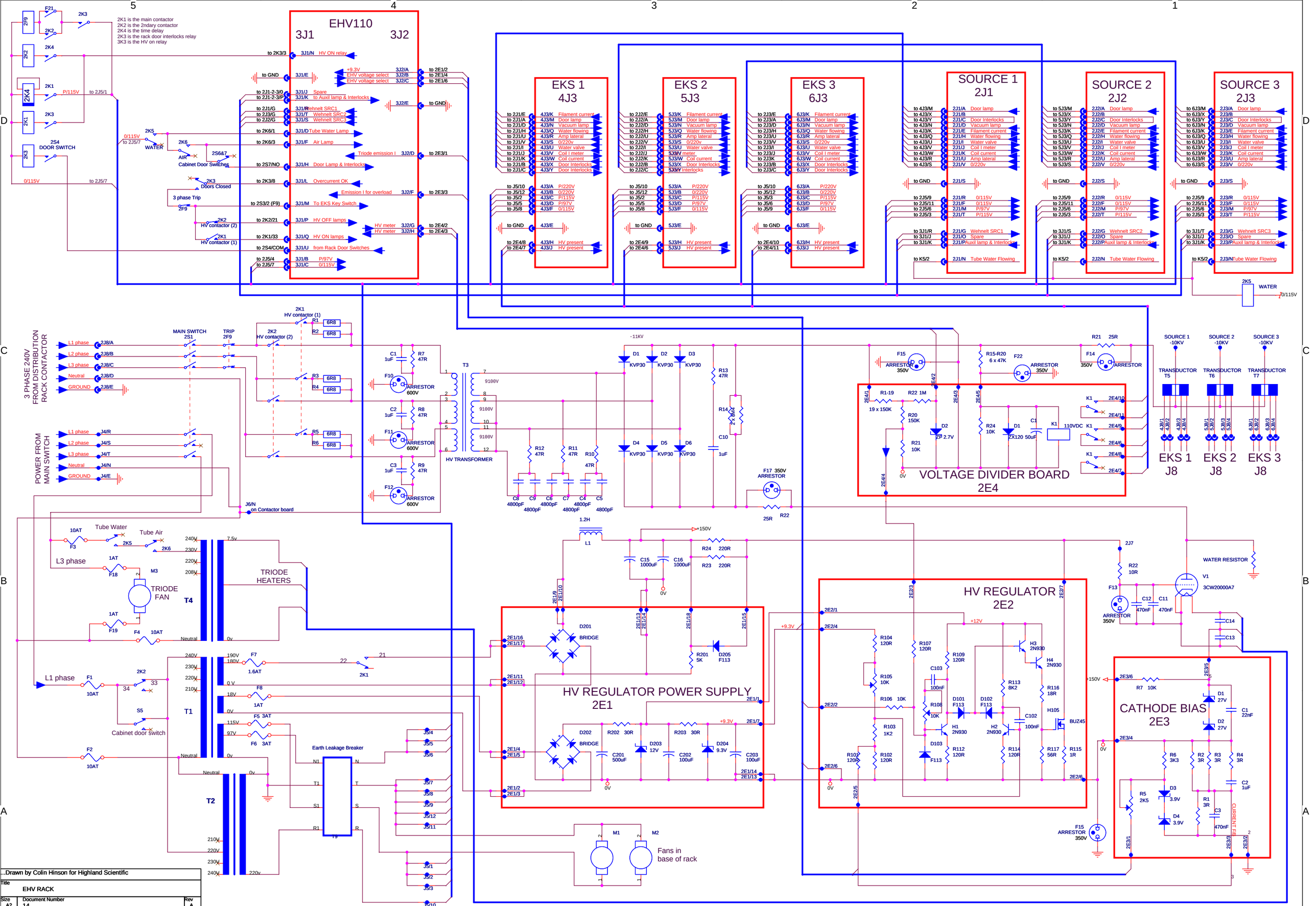
2K1 is the main contactor
2K2 is the 2ndary contactor
2K4 is the time delay
2K3 is the rack door interlocks relay
3K3 is the HV on relay
EHV110
3J1
3J2
EKS 1
4J3
EKS 2
5J3
EKS 3
6J3
SOURCE 1
2J1
SOURCE 2
2J2
SOURCE 3
2J3
3 PHASE 240V FROM DISTRIBUTION RACK CONTACTOR
POWER FROM MAIN SWITCH
HV TRANSFORMER
VOLTAGE DIVIDER BOARD
2E4
EKS 1 J8
EKS 2 J8
EKS 3 J8
HV REGULATOR
2E2
HV REGULATOR POWER SUPPLY
2E1
CATHODE BIAS
2E3
TRIODE HEATERS
TRIODE FAN
Earth Leakage Breaker
Fans in base of rack
WATER RESISTOR
...Drawn by Colin Hinson for Highland Scientific
Title
EHV RACK
Size A2
Document Number 14
Rev A
Date: Wednesday, November 21, 2012
Sheet 1 of 1
Any comments on this diagram: please email Colin@Highland-Scientific.com